mrcarpet

Job No: F28754
Name: PETROS
Address: FLAT 6 104 PAVILIONS GARDENS SW5 9ET
Tel:
Sheet: of:

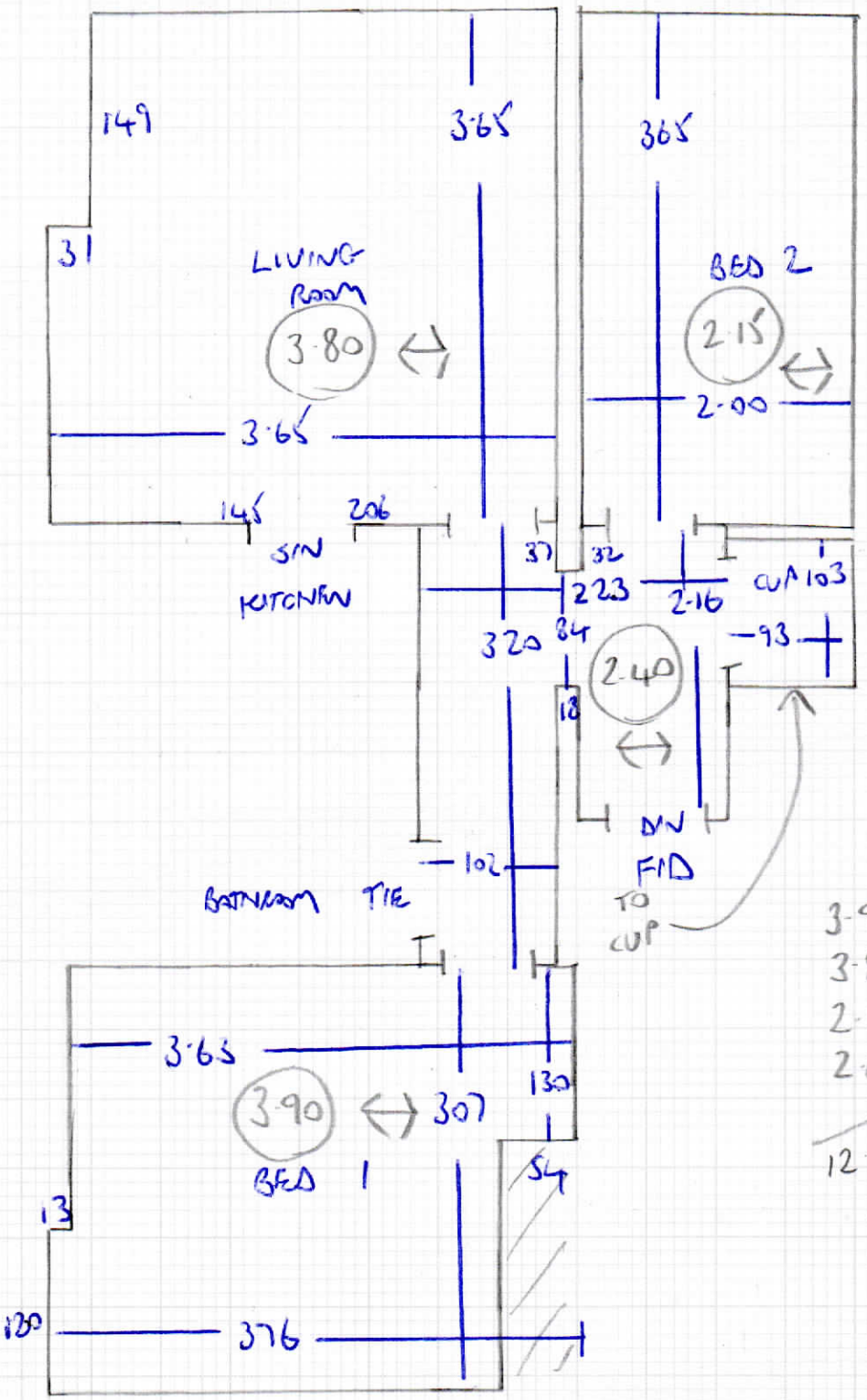

3.90 BED 1
3.80 LIVING RM
2.15 BED 2
2.40 HALL

12.25m × 4.00m
= 49m²