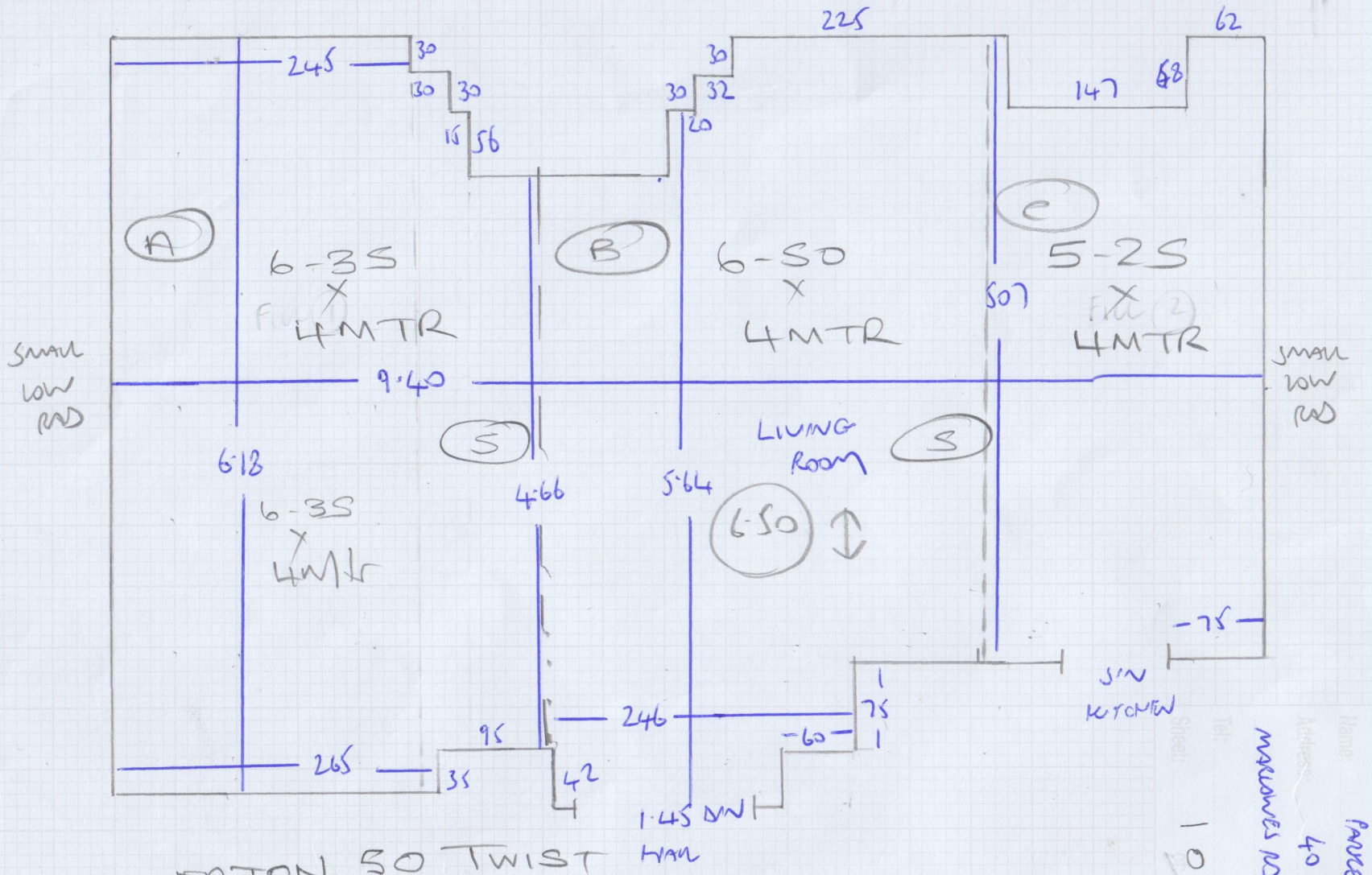

EATON 50 TWIST

EAT-50

512

6-35 x 4MTR (A)

6-50 x 4MTR (B)

5-25 x 4MTR (C)

F29398
PARKER BOWLES
40 MAGNOLIA LODGE
MARLOWES RD W8 5UT

1 OF 1