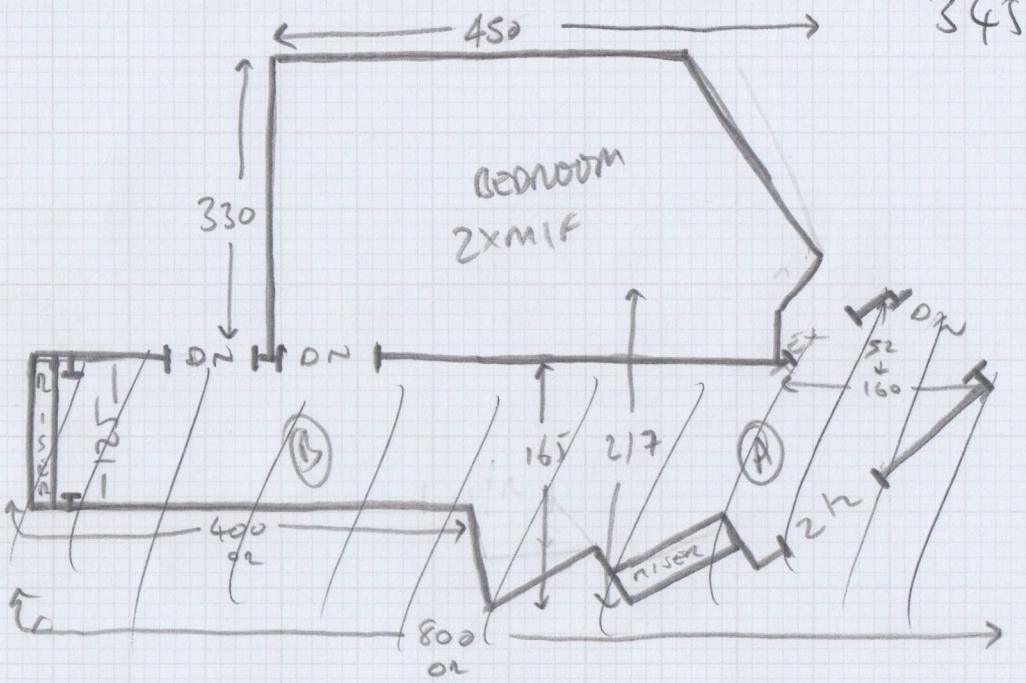

345X500

~~A~~ ~~B~~ ONLY IF DOING LAND IN TWO PIECES

mrcarpet

Job No: 334434

Name:

Address:

Tel:

Sheet: 1/1